INTEGRATION AND COMPRESSED REPRESENTATION OF GEOSPATIAL DATA USING NEURAL NETWORKS FOR 3-D PROFILING OF SUBSURFACE CONTAMINATION LEVELS[1]

Berrin Tansel[2], Ibrahim N. Tansel, Wei Y. Bao

Abstract: The advancements in environmental data acquisition tools and techniques have enabled collection of satellite images, discrete and/or continuous monitoring of subsurface contamination levels, and their changes over time. As a result, a significant amount of data and information exist in the form of digital photographic images, maps, and databases of subsurface characteristics such as groundwater contamination levels. In this study, the discrete geospatial data for subsurface contamination levels at a specific site were represented by the back propagation type neural networks. To simplify the use of the software, a user interface program was developed for reading and displaying the map of the study site. As the user moves the cursor on the map and selects the depth of the point of interest, the program provides an estimate of the level of contamination both numerically and visually as a contour plot. The neural network allows correlation of the geospatial data and information available from multiple databases to estimate an independent variable.

Additional Key Words: Neural networks, visualization, groundwater contamination, contaminant transport, groundwater monitoring

---

1 Paper was presented at the 2008 "Incorporating Geospatial Technologies into SMCRA Business Processes", March 25-27, 2008, Atlanta, GA.

2 Berrin Tansel, Associate Professor, Florida International University, Civil and Environmental Engineering Department, Miami, Florida, 33174
Ibrahim N. Tansel, Professor, Florida International University, Mechanical Engineering Department, Miami, Florida, 33174
Wei Y. Bao, Instructor, Florida International University, Mechanical Engineering Department, Miami, Florida, 33174

Introduction

Back propagation type neural networks consist of simple artificial neurons with a weight. Generally a network with three layers is capable to represent complex information (Prickett and Lonnquist, 1971). These layers include input, hidden and output layers. The weights of the nodes are adjusted during the training process. If the geographic coordinates and depth are given as inputs, and concentration level of a contaminant is represented as output, the neural network is trained to develop the correlation between the inputs (geographic coordinates, and depth) and output (level of contamination) (McLaughlin et al., 1993). After the training process using the discrete data collected from the groundwater monitoring wells, the neural network can be used to predict the contaminant levels at other coordinates around a site to produce continuous 3-D contour maps of contamination profiles.

In this study, the discrete geospatial data for subsurface contamination levels at a specific site were represented by the back propagation type neural networks. To simplify the use of the software, a user interface program was developed for reading and displaying the map of the study site. As the user moves the cursor on the map and selects the depth of the point of interest, the program provides an estimate of the level of contamination both numerically and visually as a contour plot. The neural network allows correlation of the geospatial data and information available from multiple data bases to estimate an independent variable.

Data Analysis and Visualization

The schematic of the geospatial contaminant visualization package (GCVP) is presented in Figure 1. The package consists of four modules: user interface, a backpropagation-based neural network, a 3-D grid generation and simulation, and a graphics support. The user interface module allows the communication with the

operator for data input and selection of options. This module was developed as a user friendly system and uses pull-down menus and selection of graphical output mode. To input the data for training, the CVP stays in the background allows the operator to use Excel spreadsheet program. Operator can either enter the data or read a file through the commercial software. After the operator inputs the data, the training can be initiated through pull-down menus.

The neural network module estimates the parameters from the training data. The default mode can be used for most cases. The 3-D grid generation module creates a 3-D grid in the XYZ space and the contaminant concentration is estimated at every grid point and provided to the graphics module. The graphics module consists of three sub modules: map display, gray-scale plot preparation, and estimation. The aerial map of the site is scanned and saved on digital form. The coordinates of three reference locations on the map can be provided by Global Positioning System (GPS). The program calibrates the coordinates of all the points on the map based on the GPS data of three reference points. The user can obtain an estimate of the subsurface contaminant concentration at any point of the map by moving the cursor, using the mouse button, and providing the depth for which the contaminant level is to be estimated. The estimation module uses the trained neural network to predict the concentration at the selected location. The concentrations of all the contaminants are displayed for that point. The concentration profile at the site can be estimated and visualized through the arrays created by the 3-D grid generation module which displays XY, YZ, and ZX surfaces simultaneously.

Results

The graphical displays of the GCVP are presented in Figure 2. The graphical displays demonstrate the following:

- The Excel-based data input

- The digitized map of a simulated site
- Three gray-scale plots of the UCVP

The package displays the contaminant profiles in 3-D and presents the data in XY, YZ, and ZX planes of any selected point, simultaneously.

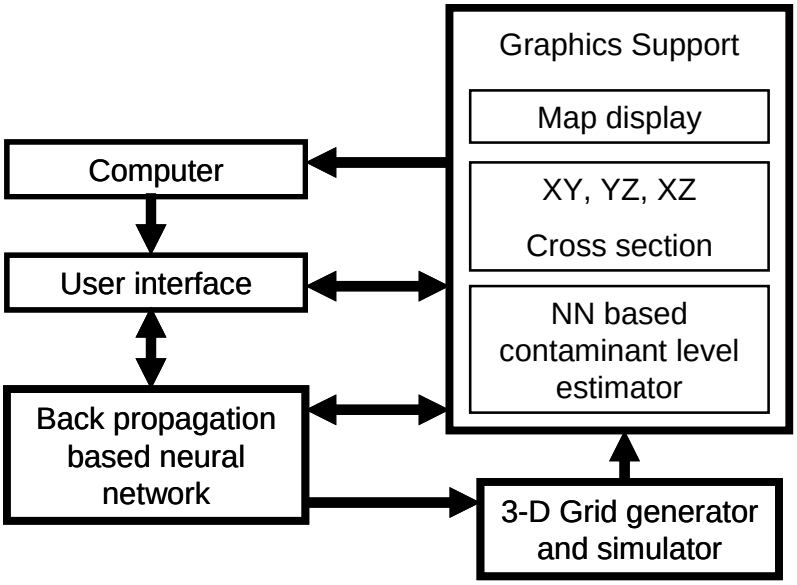

Figure 1. General information flow of the GCVP.

Conclusions

The neural networks can be coupled with GPS data to generate the spatial modeling of 3-D subsurface contamination profile as shown in Figures 3 and 4. The GCVP allows the user to develop a visual profile with limited information. It is capable of converting raw data into meaningful graphical images in a short time without any additional information.

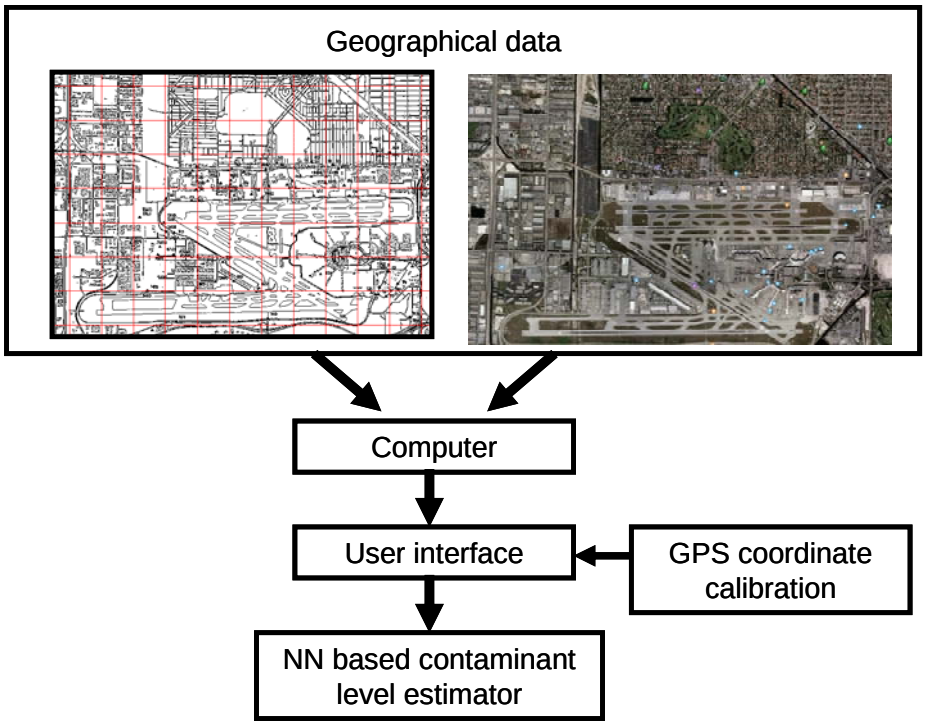

Figure 2. Data calibration with GPS.

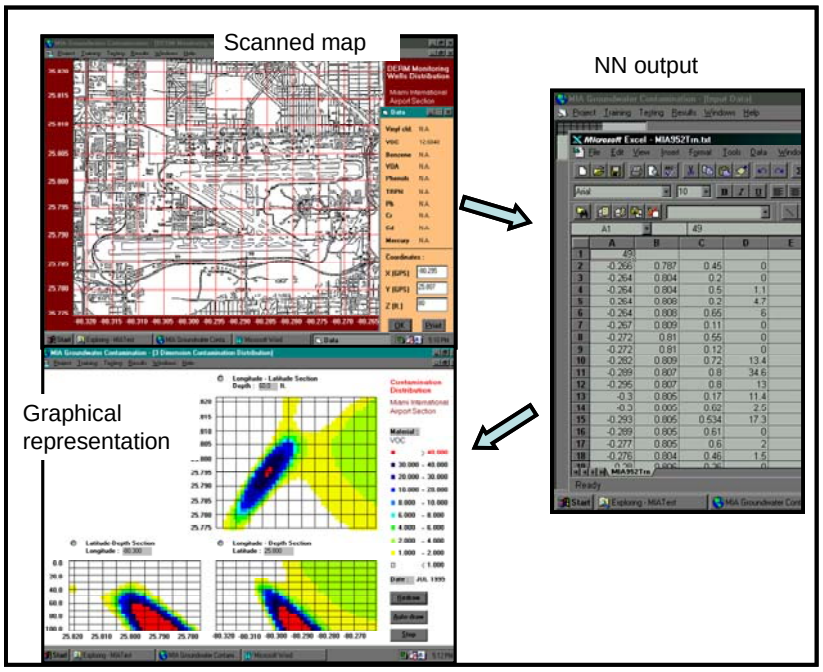

Figure 3. Integration of visual and numerical outputs.

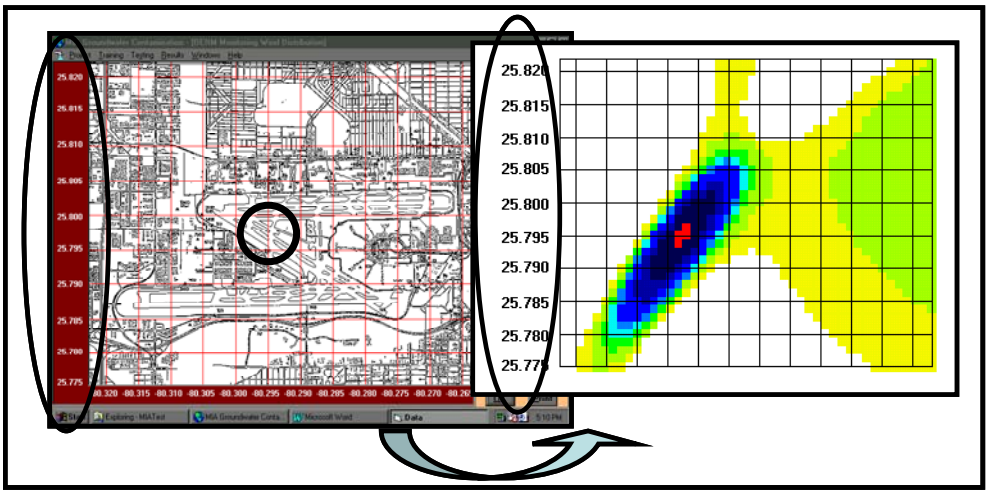

Figure 4. Overlay of map and contaminant profile.

References

1. T.A. Prickett, C.G. Lonnquist, "Selected Digital Computer Techniques for Groundwater Resource Evaluation," *Bulletin 55*, Board of Natural Resources and Conservation, State of Illiniois, 1971.
2. D. McLaughlin, L.B. Reid, S.G. Li, J. Hyman, "A Stochastic Method for Characterizing Ground-Water Contamination," *Ground Water*, Vol.31, No.2, March April, 1993, pp. 237-249